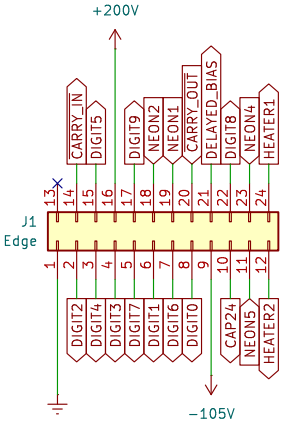

Set/Reset signals on the flip-flops for the incoming digit to add to the accumulator

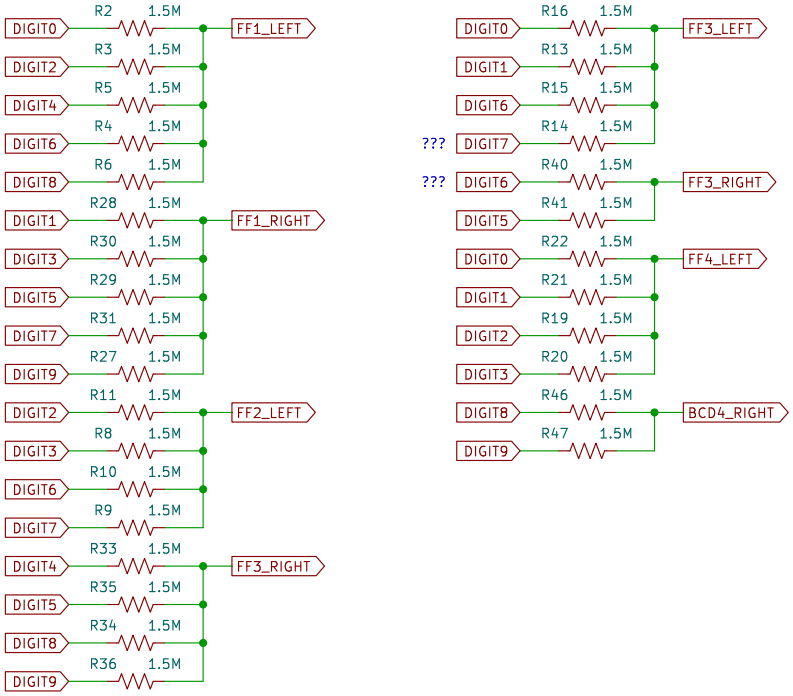

Flip-Flop 1

File: flip_flop_1.kicad_sch

Flip-Flop 2

File: flip_flop_2.kicad_sch

Flip-Flop 3

File: flip_flop_3.kicad_sch

Flip-Flop 4

File: flip_flop_4.kicad_sch

1. All resistors 1/2 watt +/- 5% unless otherwise stated.
2. All capacitors rated for 500V.

Sheet: /
File: Accumulator_Unit_441C1201.kicad_sch

Title: Compu-Tronic Accumulator Unit Schematic

Size: A4	Date: 10-23-1958	Rev:
KiCad E.D.A. 8.0.9		Id: 1/5

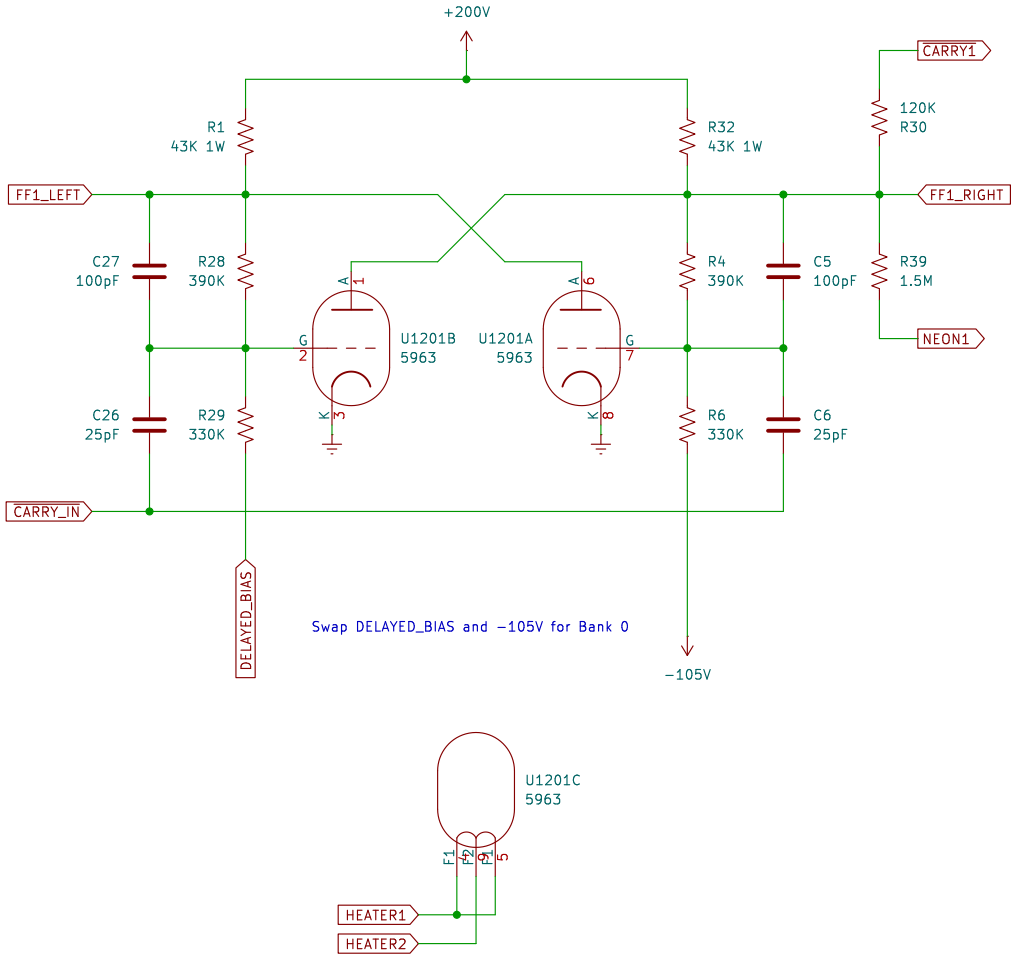

Sheet: /Flip-Flop 1/
File: flip_flop_1.kicad_sch

Title: Compu-Tronic Accumulator Unit Schematic

Size: A4	Date: 10-23-1958	Rev:
KiCad E.D.A. 8.0.9		Id: 2/5

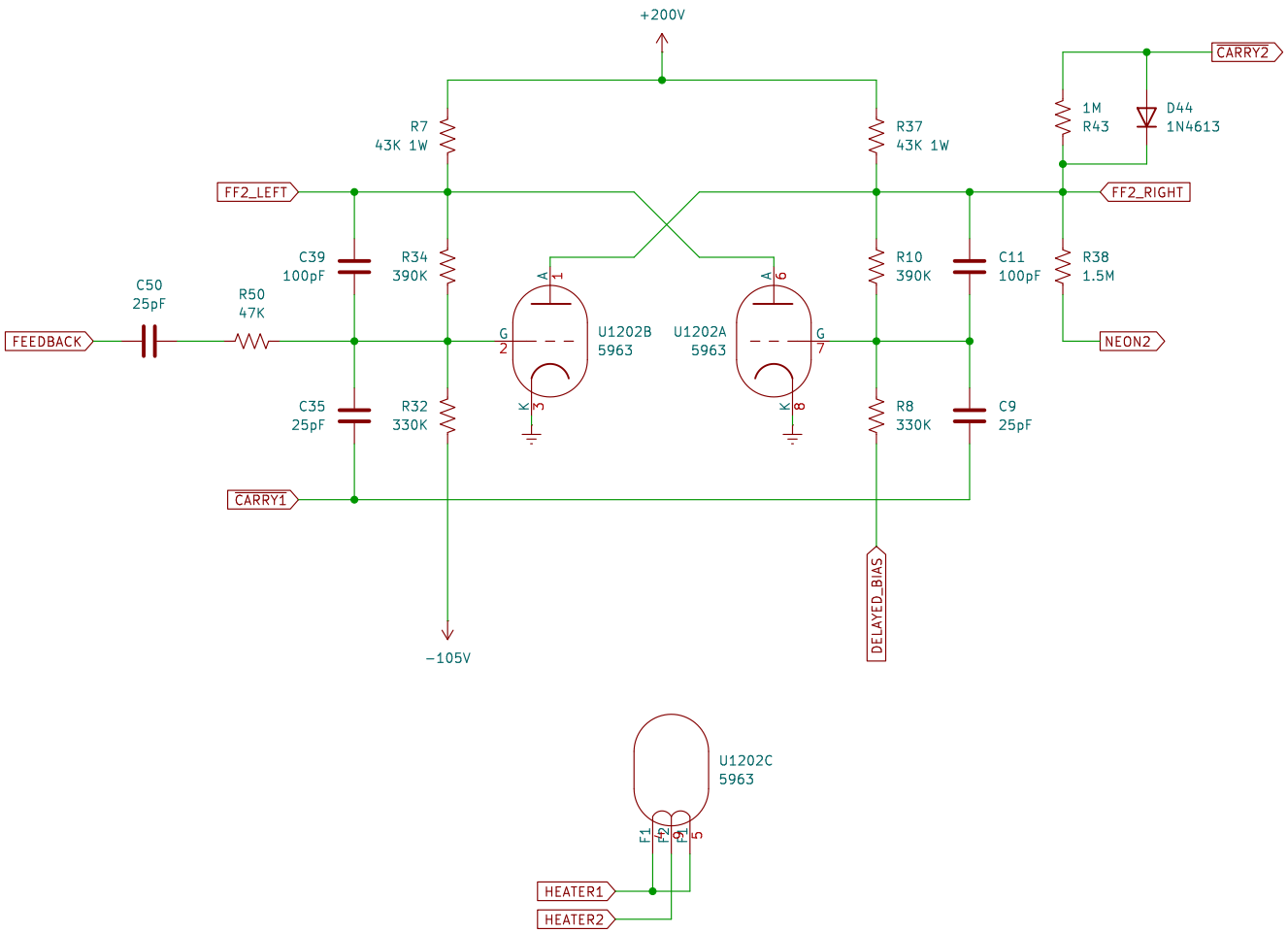

Sheet: /Flip-Flop 2/
File: flip_flop_2.kicad_sch

Title: Compu-Tronic Accumulator Unit Schematic

Size: A4	Date: 10-23-1958	Rev:
KiCad E.D.A. 8.0.9		Id: 3/5

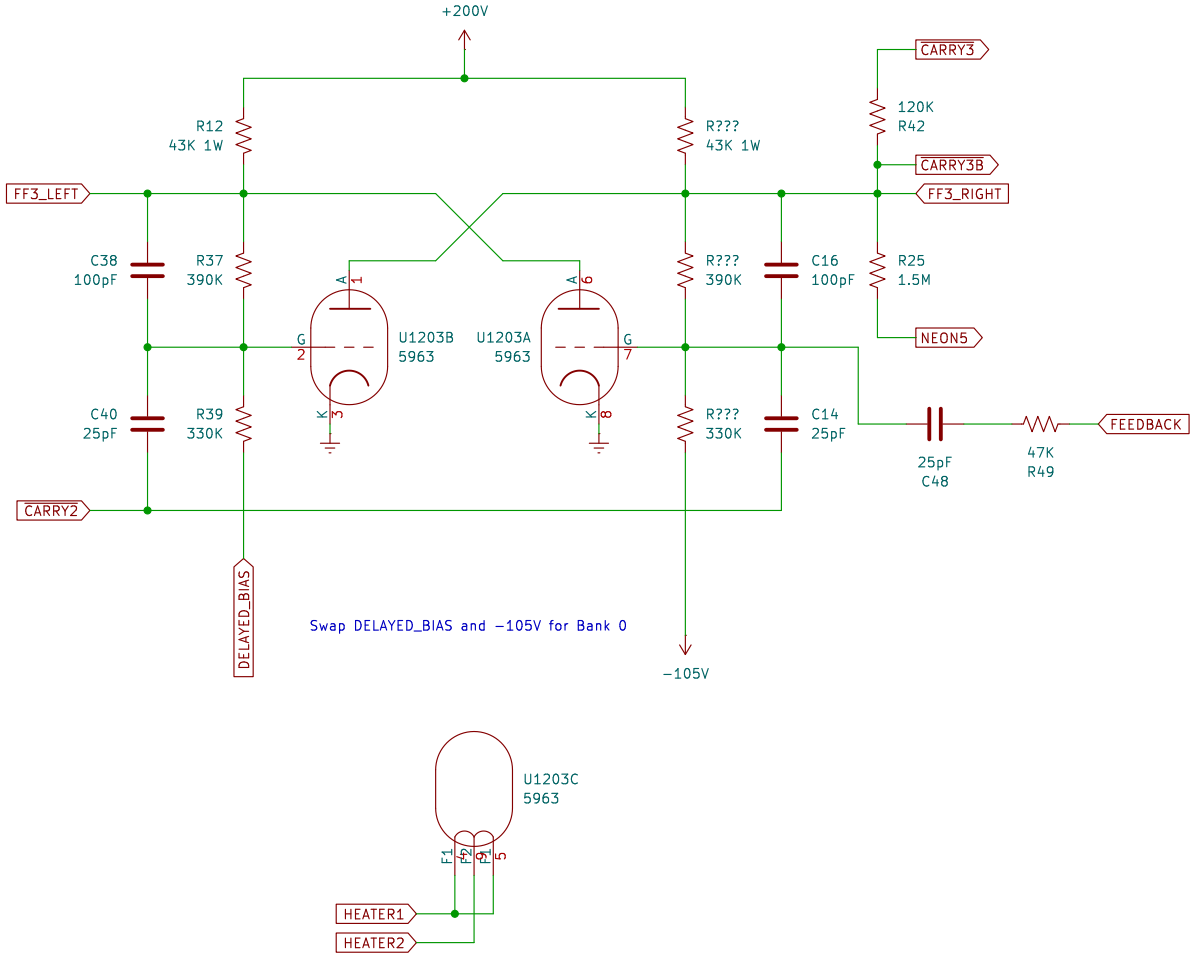

Sheet: /Flip−Flop 3/
File: flip_flop_3.kicad_sch

Title: Compu−Tronic Accumulator Unit Schematic

Size: A4	Date: 10−23−1958	Rev:
KiCad E.D.A. 8.0.9		Id: 4/5

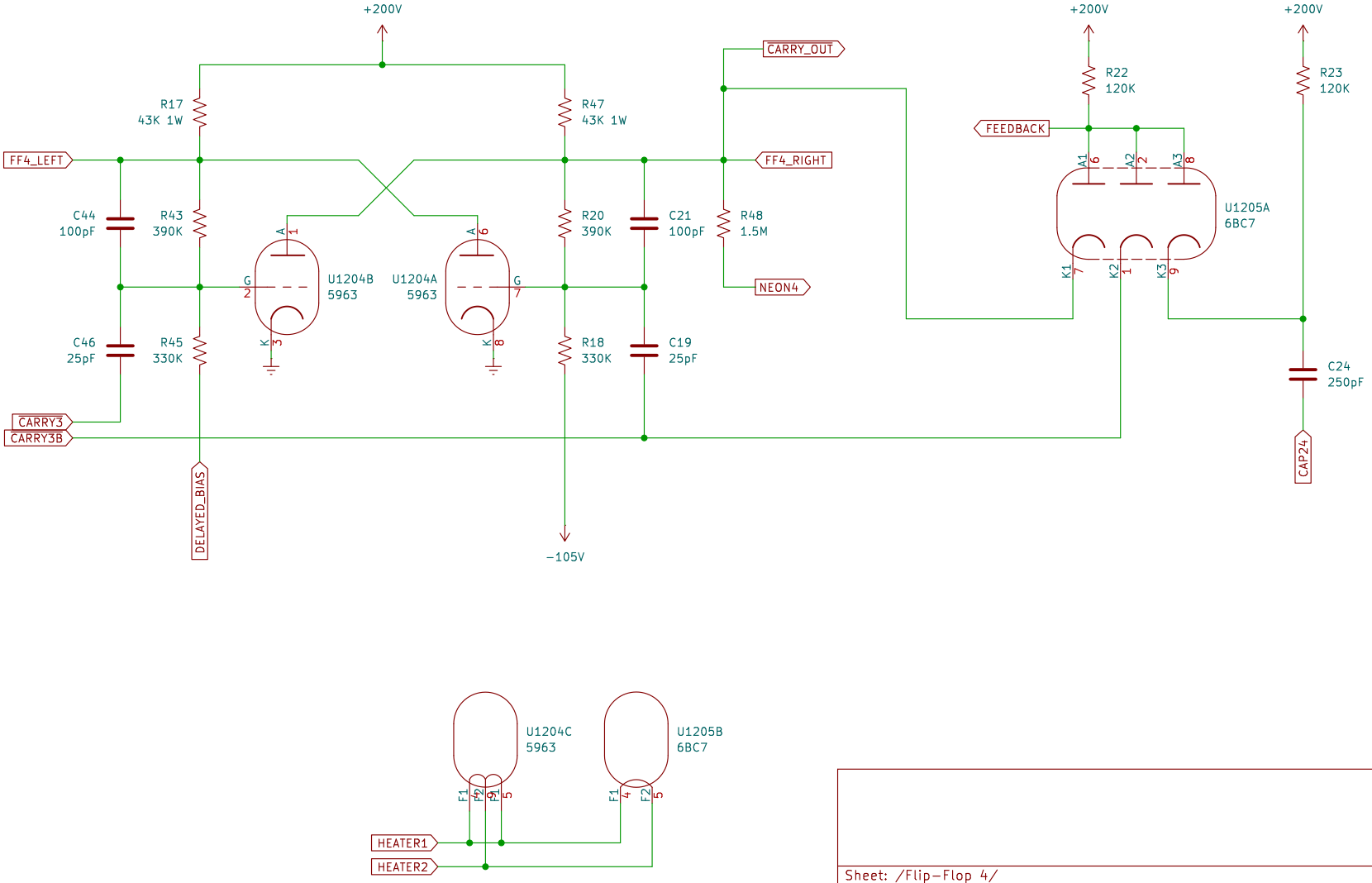

Sheet: /Flip-Flop 4/
File: flip_flop_4.kicad_sch

Title: Compu-Tronic Accumulator Unit Schematic

Size: A4	Date: 10-23-1958	Rev:
KiCad E.D.A. 8.0.9		Id: 5/5